T140

40hp Top Surface Drying System

Proto-Vest Inc.
A Division of J.E. ADAMS INDUSTRIES, LTD

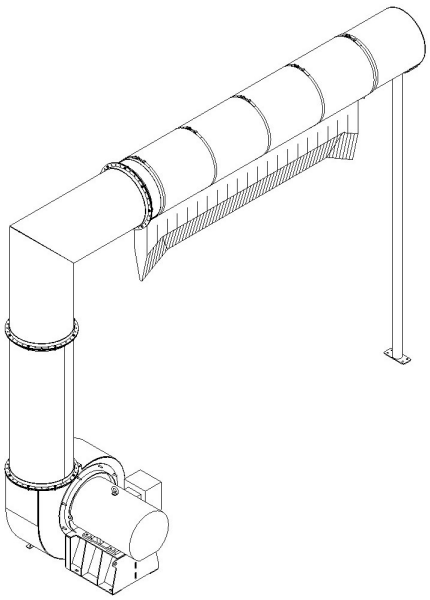



Features & Benefits

- Adjustable Bag Angles
- (1) 40 Horse Power Motor
- Touch Free Drying
- Motor can be placed driver or passenger side
- Low Maintenance

Motor Specifications

- 40hp, 3600 RPM's
- 208-230 / 460 volts
- 1.15 service factor
- Frame: 324TS
- 3 Phase
- (TEFC) Totally enclosed, fan-cooled

NOTE: Wiring and controls to be provided by the purchaser: Additional motor specifications available upon request. Additional voltages available on special order.

The Proto-Vest T140 is ideal for conveyor operations. This machine can effectively dry the roof, hood, front and rear windows while assisting with the sides of vehicles as they pass under the drying equipment.

Equipment Options



- Silencer Package -
- Reduce decibel levels generated by the dryer to ensure a pleasant wash environment

- Stainless Blower Package
- All stainless steel blower assembly

- Motor starter options available:
- DOL Starter
- Soft start
- VFD

Your Choice in Air Bag Color

Proto-Vest dryer bags come standard Black.
Red, Green, and Blue available while supplies last.

The Ultimate In Drying Technology

T140

40hp Top Surface Drying System

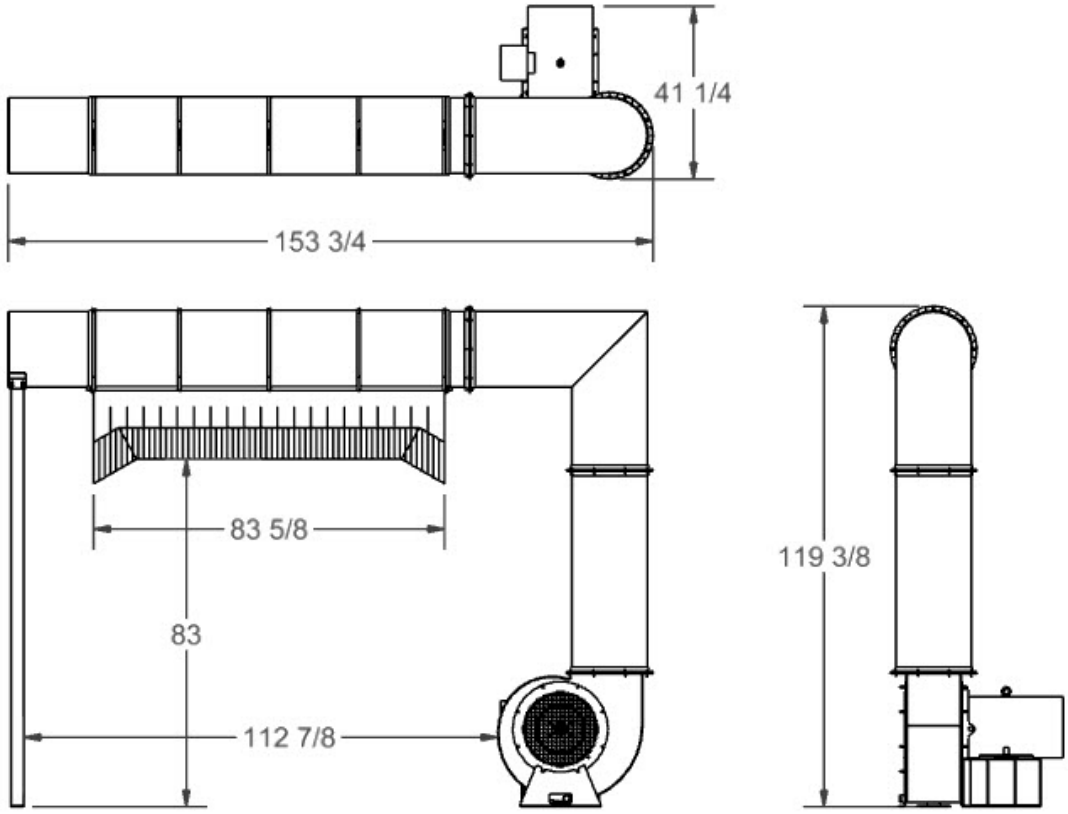

General Description

The Proto-Vest T140 is designed as a stand-alone or modular drying system that is ideal for conveyor operations. This patented design uses one 40hp motor, one high strength steel blower, plenum and an 84" adjustable Proto-Duct™ overhead bag. These features allow the T140 to effectively dry the roof, hood, front and rear windows while assisting with the sides of vehicles as they pass under the drying equipment.

The T140's blower/motor assembly is engineered for both maximum efficiency and cost effectiveness to help deliver the best drying results using the least amount of energy. The blower/ motor assembly can also be equipped with the optional Proto-Vest Silencer Package™ to reduce noise emissions.

Proto-Vest's stringent standards in material selection for its dryers results in extended equipment life and reduced maintenance. The T140's blower assembly is manufactured from high strength steel, its plenum is made from 5052-H32 aluminum, and its bag is produced from durable Proto-Duct™.

(Please note that J.E. Adams recommends routine maintenance in order to maximize product life.)

Service / Support

J.E. Adams recognizes that support after the sale of equipment is critical to the success of our customers. Our company offers its customers access to the following services: replacement parts through our network of distributors and an engineering staff for custom designed applications.

*To contact customer support call us toll free at **800.553.8861** or go to **www.jeadams.com**.*

Proto-Vest Patents:
U.S.: 3,942,430; 4,161,801; 4,409,035; 4,418,442; 4,433,450; 4,445,251; 4,446,592; 4,589,160; 4,700,426; 5,027,714; 5,184,369; 5,187,881; 5,195,207; 5,280,665; 5,421,102; 5,553,346; 5,886,648; 5,901,461; 5,950,324; 5,960,564; 6,038,781; 6,176,024; 6,519,872; others pending.
Canada: 1,021,996; 1,111,328; 1,190,453; 1,201,040; 1,197,439; 1,219,195; 1,219,192; 1,219,194; 1,258,026; 1,219,193; 2,013,749; 2,071,568; 2,071,239; 2,071,388; others pending.

*Specifications subject to change without notice.
*If starting motor over 10-12 times an hour it may be more efficient to leave blower on.

1025 63rd Ave SW, Cedar Rapids, IA 52404
800-553-8861 • 319-363-0237 • Fax 319-363-8120
www.jeadams.com

© Copyright 2025, Proto-Vest, a Divisions of J.E. Adams Industries. All rights reserved.