T180

80hp Top Surface Drying System

Proto-Vest Inc.
A Division of J.E. ADAMS INDUSTRIES, LTD

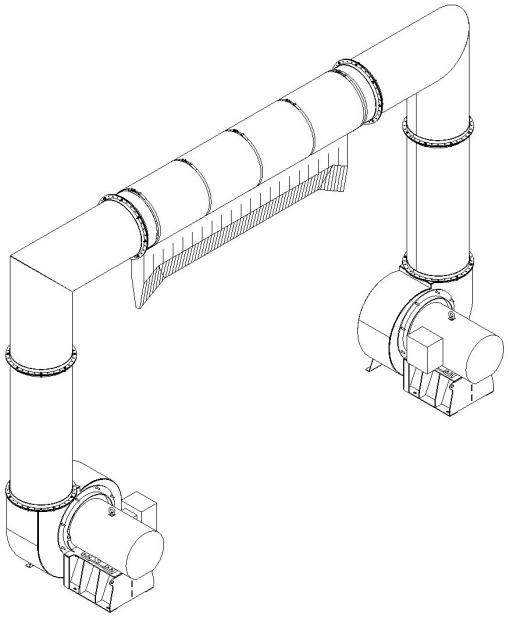



Features & Benefits

- Split Plenum for Motor Stagger Starts
- Adjustable Bag Angles
- (2) 40 Horse Power Motors
- Touch Free Drying
- Low Maintenance
- High Vehicle Count Per Hour

Motor Specifications

- (2) 40hp, 3600 RPM's
- 208-230 / 460 volts
- 1.15 service factor
- Frame: 324TS
- 3 Phase
- (TEFC) Totally enclosed, fan-cooled

NOTE: Wiring and controls to be provided by the purchaser:
Additional motor specifications available upon request.
Additional voltages available on special order.

The Proto-Vest T180 is ideal for a variety of line speeds. This machine can effectively dry the roof, hood, front and rear windows while assisting with the sides of vehicles as they pass under the drying equipment.

Equipment Options



- Silencer Package -
- Reduce decibel levels generated by the dryer to ensure a pleasant wash environment

- Stainless Blower Package
- All stainless steel blower assembly

- Motor starter options available:
- DOL Starter
- Soft start
- VFD

Your Choice in Air Bag Color

Proto-Vest dryer bags come standard Black.
Red, Green, and Blue available while supplies last.



The Ultimate In Drying Technology

T180

80hp Top Surface Drying System

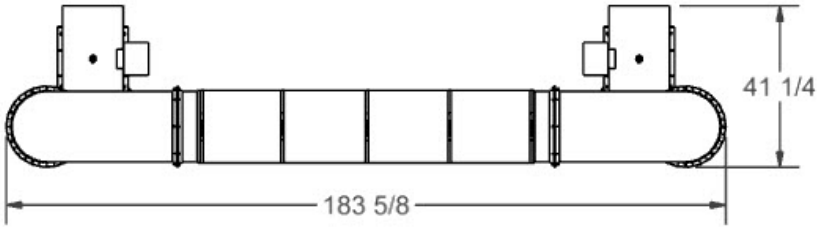

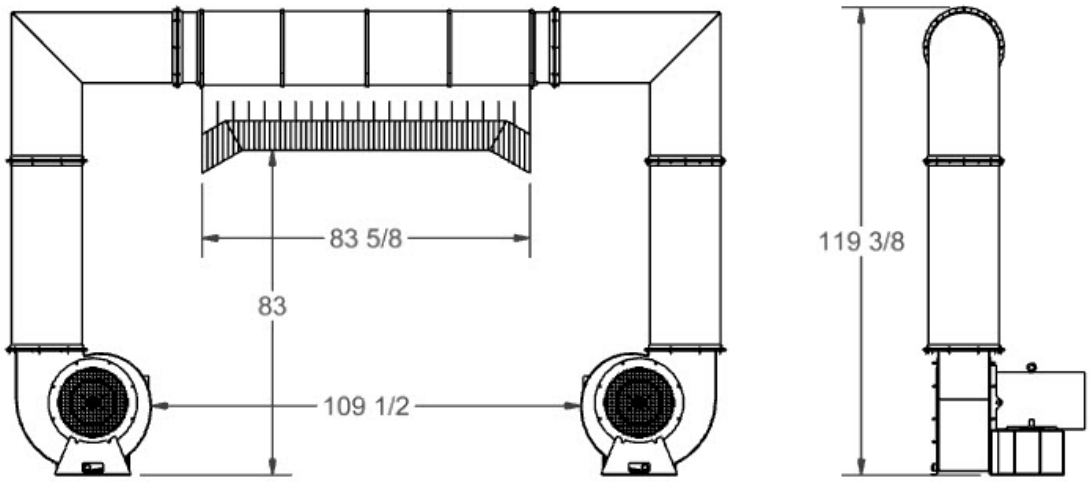

General Description

The Proto-Vest T180 is designed as both a stand alone and modular drying system that operates at a variety of line speeds. This unit uses (2) 40hp blowers, a plenum and an 84" Proto-Duct™ overhead bag. The T180's bag is adjustable for precise air flow. These features allow this configuration to dry the roof, hood, front and rear windows of all vehicles as they pass under the drying equipment.

The T180's blower/motor assemblies are engineered for both maximum efficiency and cost effectiveness. Each assembly can also be equipped with the optional Proto-Vest Silencer Package™ to further reduce noise emissions.

Proto-Vest's stringent standards in material selection for its dryers results in extended equipment life and reduced maintenance. The T180's blower assembly is manufactured from high strength powder coated steel, its plenum is made from 5052-H32 aluminum, and its bag is produced from durable Proto-Duct™.

(Please note that J.E. Adams recommends routine maintenance in order to maximize product life.)

Service / Support

J.E. Adams recognizes that support after the sale of equipment is critical to the success of our customers. Our company offers its customers access to the following services: replacement parts through our network of distributors and an engineering staff for custom designed applications.

*To contact customer support call us toll free at **800.553.8861** or go to **www.jeadams.com**.*

Proto-Vest Patents:
U.S.: 3,942,430; 4,161,801; 4,409,035; 4,418,442; 4,433,450; 4,445,251; 4,446,592; 4,589,160; 4,700,426; 5,027,714; 5,184,369; 5,187,881; 5,195,207; 5,280,665; 5,421,102; 5,553,346; 5,886,648; 5,901,461; 5,950,324; 5,960,564; 6,038,781; 6,176,024; 6,519,872; others pending.
Canada: 1,021,996; 1,111,328; 1,190,453; 1,201,040; 1,197,439; 1,219,195; 1,219,192; 1,219,194; 1,258,026; 1,219,193; 2,013,749; 2,071,568; 2,071,239; 2,071,388; others pending.

*Specifications subject to change without notice.
***If starting motor over 10-12 times an hour it may be more efficient to leave blower on.

1025 63rd Ave SW, Cedar Rapids, IA 52404
800-553-8861 • 319-363-0237 • Fax 319-363-8120
www.jeadams.com

© Copyright 2025, Proto-Vest, a Division of J.E. Adams Industries. All rights reserved.