TW140

Dry Back Windows of SUVs

Proto-Vest Inc.
A Division of J.E. ADAMS INDUSTRIES, LTD

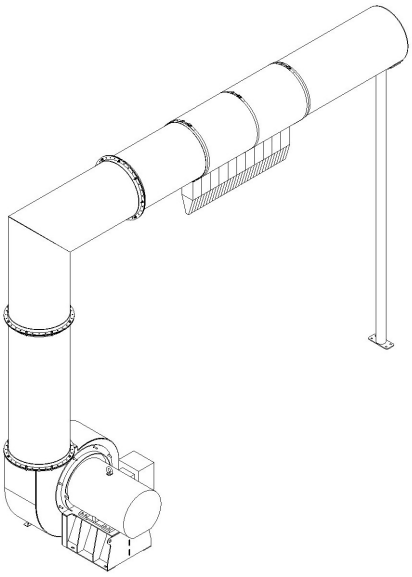

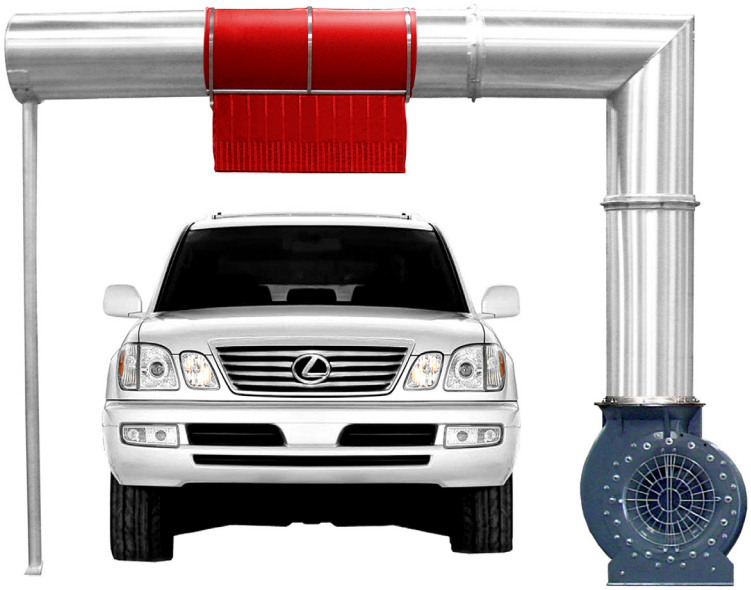

Features & Benefits

- Used Primarily for Conveyor Operations
- First or Last Dryer in a Complete System
- Adjustable Bag Angles
- One 40 Horse Power Motor
- Touch Free Drying
- Low Maintenance

Motor Specifications

- 40hp, 3600 RPM's
- 208-230 / 460 volts
- 1.15 service factor
- Frame: 324TS
- 3 Phase
- (TEFC) Totally enclosed, fan-cooled

NOTE: Wiring and controls to be provided by the purchaser:
Additional motor specifications available upon request.
Additional voltages available on special order.





The TW140s' primary function is to assist in the drying of the back of the vehicle. Utilizing only one 40hp blower, the TW140 is both energy efficient and an effective drying solution. This dryer is usually packaged as a combination unit that can be used with all Proto-Vest dryers.

Equipment Options



- Silencer Package -

- Reduce decibel levels generated by the dryer to ensure a pleasant wash environment

- Stainless Blower Package

- All stainless steel blower assembly

- Motor starter options available:

- DOL Starter
- Soft start
- VFD

Your Choice in Air Bag Color

Proto-Vest dryer bags come standard Black.
Red, Green, and Blue available while supplies last.

The Ultimate In Drying Technology

TW140

Dry Back Windows of SUVs

Proto-Vest Inc.
A Division of J.E. ADAMS INDUSTRIES, LTD

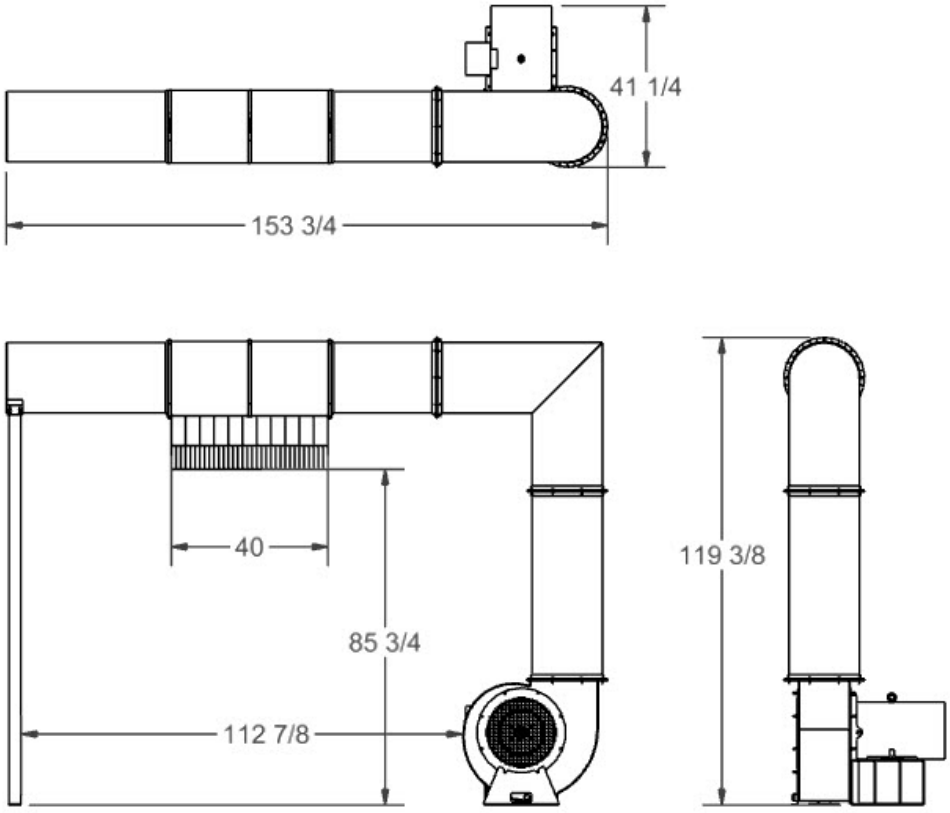

General Description

The Proto-Vest TW140 is apart of our modular drying system that is ideal for conveyor operations. This patented design uses one 40hp blower, plenum and a 40" Proto-Duct™ overhead bag. The TW140 air deployment device is adjustable and can be angled towards the rear of the vehicle to effectively dry the backend of Vans and SUVs! In addition this system assists with drying the roof, hood, front and rear windows of all vehicles as they pass under the drying equipment.

The TW140 blower/motor assembly is engineered for both maximum efficiency and cost effectiveness. It can also be equipped with the optional Proto-Vest Silencer Package™ to reduce noise emissions.

Proto-Vest's stringent standards in material selection for its dryers results in extended equipment life and reduced maintenance. The TW140 blower assembly is manufactured from high strength powder steel, its plenum is made from 5052-H32 aluminum, and its bag is produced from durable Proto-Duct™.

(Please note that J.E. Adams recommends routine maintenance in order to maximize product life.)

Service / Support

J.E. Adams recognizes that support after the sale of equipment is critical to the success of our customers. Our company offers its customers access to the following services: replacement parts through our network of distributors and an engineering staff for custom designed applications.

*To contact customer support call us toll free at **800.553.8861** or go to **www.jeadams.com**.*

Proto-Vest Patents:
U.S.: 3,942,430; 4,161,801; 4,409,035; 4,418,442; 4,433,450; 4,445,251; 4,446,592; 4,589,160; 4,700,426; 5,027,714; 5,184,369; 5,187,881; 5,195,207; 5,280,665; 5,421,102; 5,553,346; 5,886,648; 5,901,461; 5,950,324; 5,960,564; 6,038,781; 6,176,024; 6,519,872; others pending.
Canada: 1,021,996; 1,111,328; 1,190,453; 1,201,040; 1,197,439; 1,219,195; 1,219,192; 1,219,194; 1,258,026; 1,219,193; 2,013,749; 2,071,568; 2,071,239; 2,071,388; others pending.

*Specifications subject to change without notice.
*If starting motor over 10-12 times an hour it may be more efficient to leave blower on.

Proto-Vest Inc.
A Division of J.E. ADAMS INDUSTRIES, LTD

1025 63rd Ave SW, Cedar Rapids, IA 52404
800-553-8861 • 319-363-0237 • Fax 319-363-8120
www.jeadams.com

© Copyright 2025, Proto-Vest, a Division of J.E. Adams Industries. All rights reserved.